Leben im Bad
Living bathrooms

L-Cube # LC 7381

Installation instructions

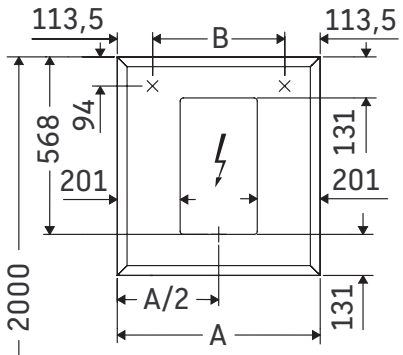

A mm	B mm
800	573

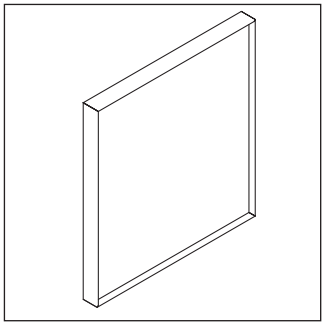

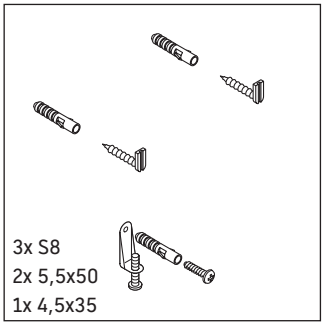

Instructions for use

The bathroom furniture range complies with the standards and guidelines applicable at the time of delivery and is designed for use in bathrooms.
Direct contact with water should be avoided, for example, when showering.
A power supply of 110 V – 230 V must be available on site.
Distance from the sensor to the reflecting surfaces = > 75 mm.
We reserve the right to make technical improvements and design modifications to the products illustrated.

1

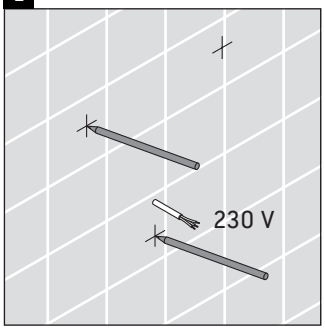

2

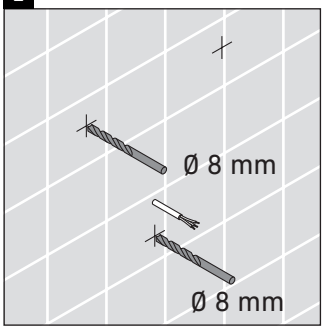

3

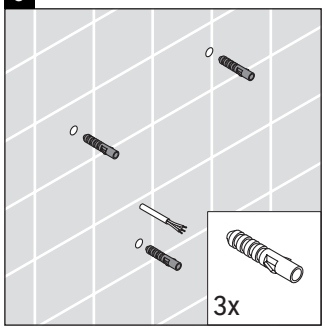

4

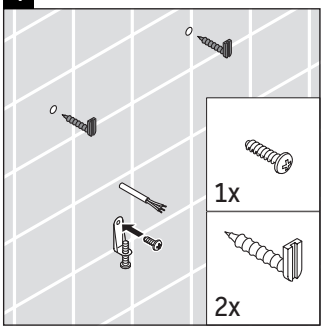

5

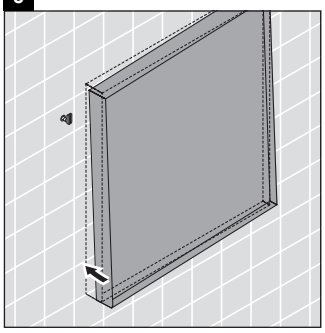

6

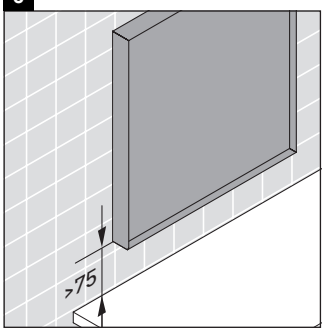

7

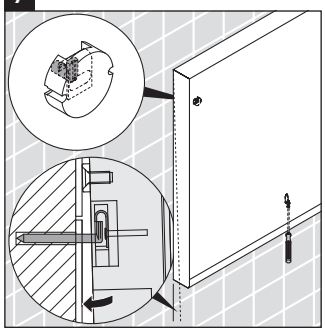

8

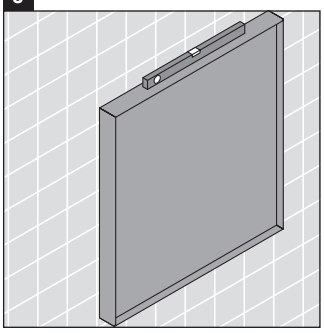

9

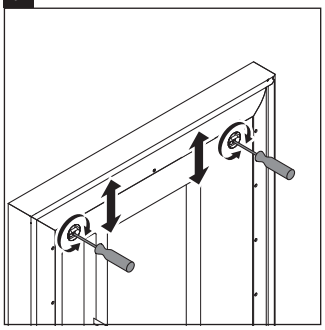

Best.-Nr. LC7381/15.02.1

Duravit AG, Werderstr. 36, 78132 Hornberg, Germany, Phone +49 78 33 700, Fax +49 78 33 70 289, info@duravit.de, www.duravit.de