Lecico
quality bathroom solutions

NEON

FRONT FLUSH CC WC

COLOUR	WHITE
MATERIAL	VITREOUS CHINA
PAN CODE	NEOPANFLOOOOOUE
PAN WEIGHT	14,33KG
CISTERN CODE	NEOCISFFLONOMUE
CISTERN WEIGHT	14,24KG
SEAT	MDF, LUX 2000 OR ELF SEAT
MDF SEAT CODE	CHISEASTDOMDFUC
MDF SEAT WEIGHT	3.15KG

WC SCREW TO FLOOR, FIXING SCREWS NOT SUPPLIED.
AVAILABLE WITH MDF, LUX 2000 OR ELF SEAT.

W 380 | H 759 | D 630

LECICO RESERVE THE RIGHT TO CHANGE THE PRODUCT WITHOUT NOTIFICATION

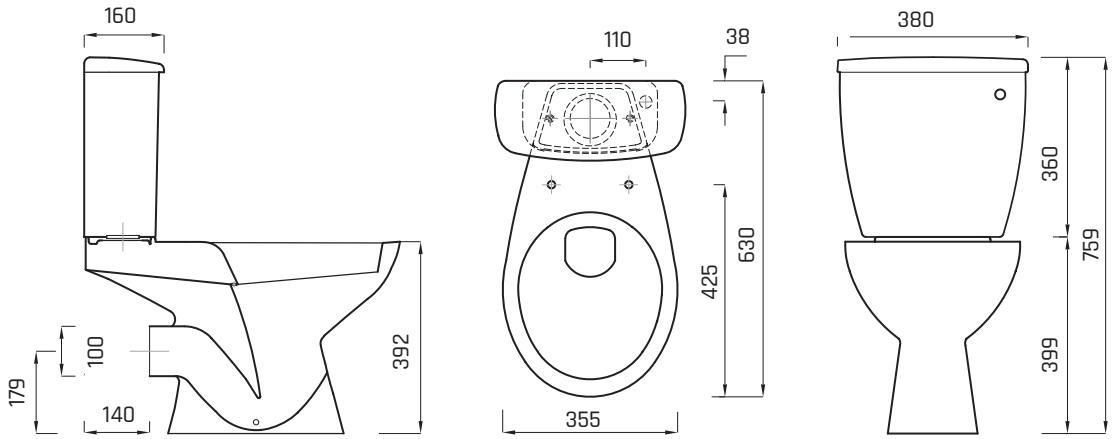

T: +27 21 531 9848 | F: +27 21 531 1538 | www.lecicosa.co.za