quality bathroom solutions

ATLAS

BACK TO WALL TOP INLET WC

- **COLOUR:** WHITE
- **MATERIAL:** VITREOUS CHINA
- **PAN CODE:** ATBTWTE
- **WEIGHT:** 19,82KG
- **SEAT COVER CODE:** ATSEAT
- **WEIGHT:** 1,64KG
- **FEATURES:** WC SCREW TO FLOOR, FIXING SCREWS NOT SUPPLIED. THE FOLLOWING COBRA FLUSHVALVUES ARE COMPATIBLE WITH THIS PAN: JUNIOR FLUSHVALVUE FJ2.210 & STANDARD FLUSHVALVUE FM1.210 & FM2.210

Lecico reserve the to change the product without prior notification.

W: 366	H: 395	D: 575
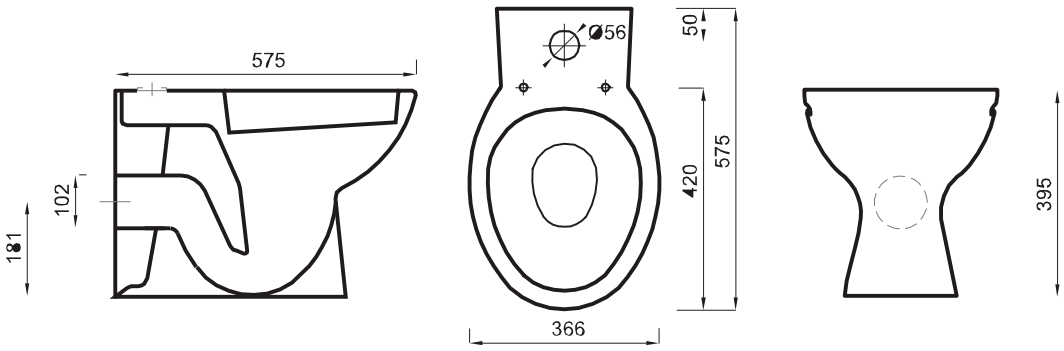
T: 021 531 9848 | info@lecicosa.co.za | www.lecicosa.co.za