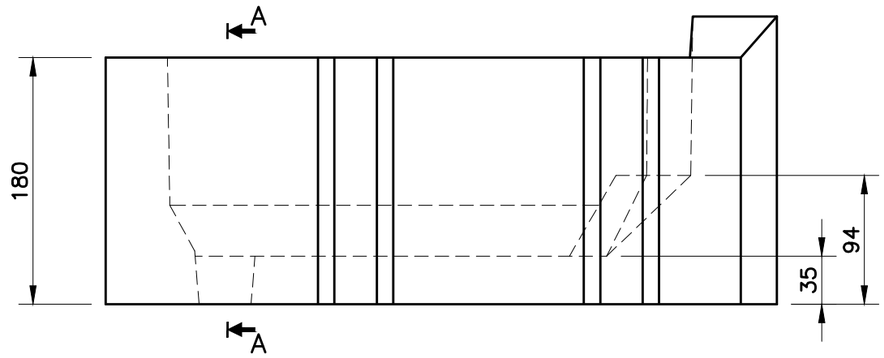

SIDE VIEW

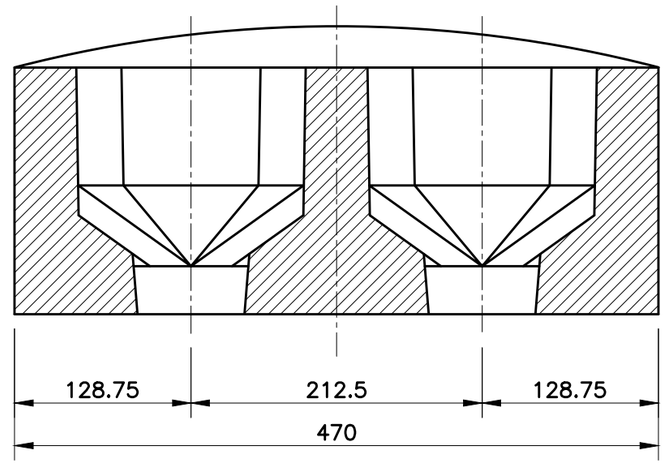

SECTION A-A

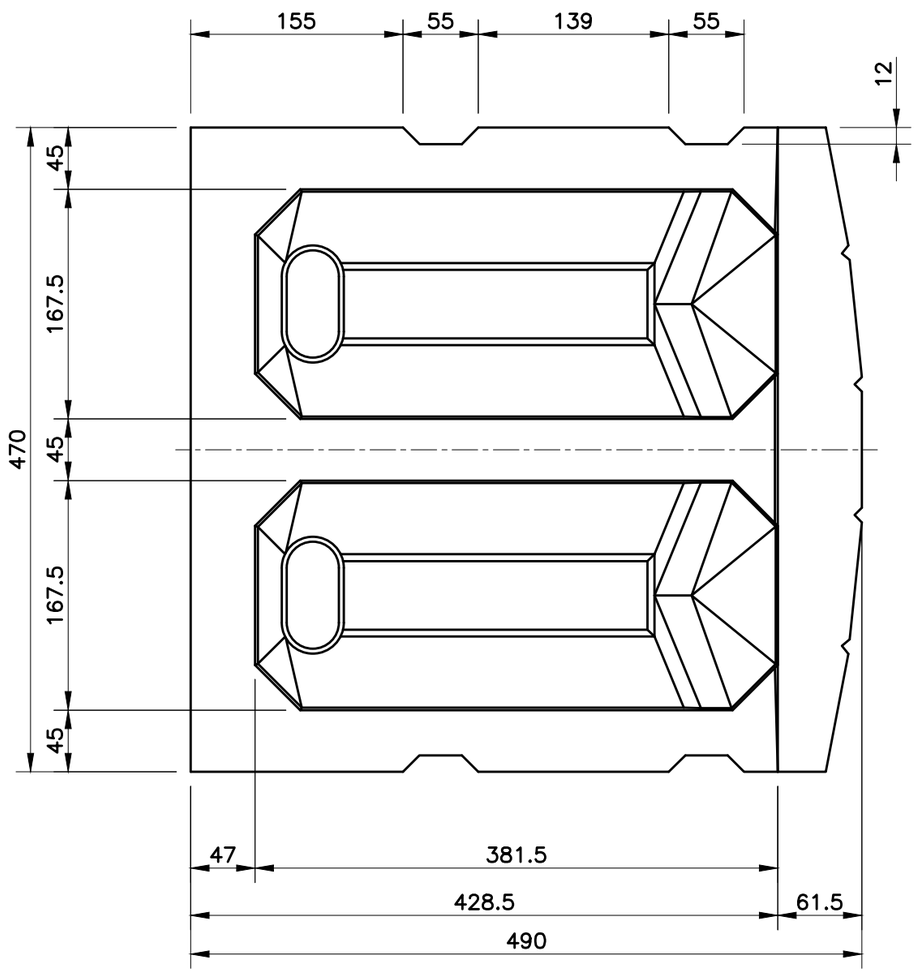

PLAN

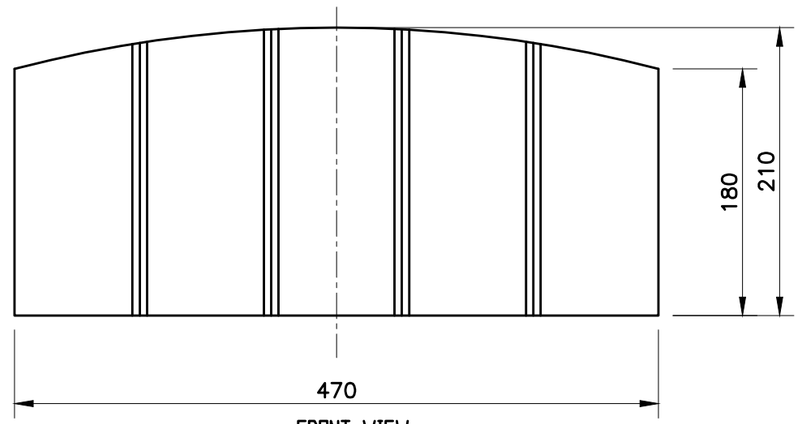

FRONT VIEW

NAME	DATE	No.	REVISION – HERSIENING

ARRANGEMENT NUMBER:

ACTUAL DRAWING SIZE: A2

ALL STEEL TO BE **PRIMED & PAINTED**

THIS DRAWING IS BOTH CONFIDENTIAL AND THE COPYRIGHT OF INFRASET & MAY NOT BE REPRODUCED IN ANY FORM WHATSOEVER WITHOUT THE WRITTEN AUTHORITY OF INFRASET

AVENG INFRASET

CLIENT

TITLE: TERRACE BLOK 490 PRODUCT DRAWING

DRAWN	L.J.B.	17/11/16
DESIGNED		
CHECKED		
APPROVED		
SCALE	1:3	DATE

DRG No.

FACTORY	PLANT	TYPE	NUMBER
22	01	08	012

REVISION