SHOWER ROSE 100mm ROUND

032432

SPECIFICATION SHEET

PRODUCT DETAILS

MATERIAL *PLASTIC*

COLOUR *CHROME*

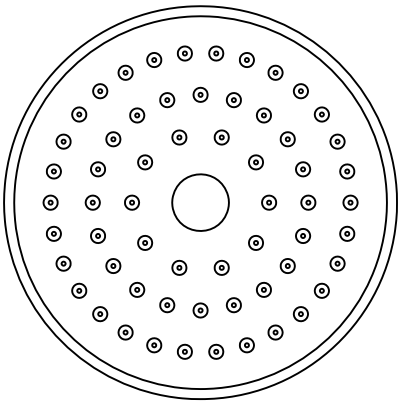

TECHNICAL SPECIFICATIONS

	0.15Mpa	0.25Mpa	0.35Mpa	0.5Mpa
without regulator	11.6L/M	16.6L/M	20.7L/M	
two holes regulator	4.7L/M	6L/M	7L/M	8L/M
three holes regulator	7.2L/M	9.9L/M	11.7L/M	13.9L/M
four holes regulator	9.1L/M	12.5L/M	15.2L/M	18.5L/M

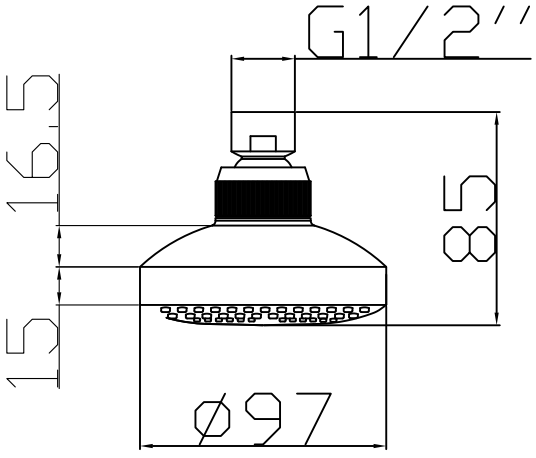

CLEANING INSTRUCTIONS

1. Avoid cleaning agents containing ingredients, such as chlorine bleach, formic acid, acetic or Hydrochloric acid.

2. Wipe all surfaces using a soft unabrasive cloth, with warm soapy water.

SABS APPROVED

1 YEAR WARRANTY

WWW.PLUMBLINK.CO.ZA

Plumblink tries its best to ensure that the information given on our website is accurate. Although, we cannot guarantee this for certain, and accept no liability for any information.